Model #

1501AFGSPa; 1501AFCAFa

Pacific Beveled Mirror

AFGSP = Glazed Spice finish

AFCAF = Caffè finish

Assembly Instructions

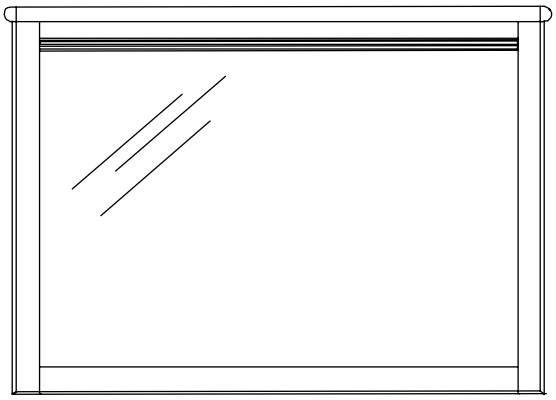

IMPORTANT NOTES:

- For normal household use only. *Not* recommended to use this product in a commercial setting.
- Handle the mirror with care. Glass is fragile.
- Before you begin your project, completely read the Assembly Instructions.
- Store this item: 1- in its box; 2- in a dry place; 3- in temperatures that range from 40°F to 90°F (not on a cold and possibly damp cement floor).
- Periodically inspect your furniture for any loose glue joints, screws or any other problem that might affect the stability of your furniture. Tighten or repair as needed.

DESIGN SUBJECT TO CHANGE WITHOUT NOTICE

Congratulations!
This fine piece of furniture will make a gorgeous addition to your home. For the best results, read the Assembly Instructions before you begin your project.

CALL US FIRST! *Do not return this item to the store.*

Service Policy: We will replace any part that is defective, missing or damaged during assembly. For a replacement part, phone, fax mail or email your request to the Whittier Wood Products customer service department.

Hours: Our friendly customer service staff can be reached Monday-Friday 7:00 a.m. to 5:00 p.m. (Pacific Time). You may leave a message 24 hours a day, seven days a week.

To Order: Provide the finish and furniture model number (upper portion of this page), the part letter, production code, quantity needed, reason for replacement and your full name, address and telephone number.

Parts ship from our Eugene, Oregon factory within one or two business days from the time we receive your request. Please allow five to ten business days for delivery.

800-653-3336 • Outside the U.S. or Canada: 541-687-0213 • Fax: 541-687-2060
www.whittierwood.com • P.O. Box 2827 • Eugene, Oregon 97402, U.S.A.

Whittier Wood™ FURNITURE

P.O. Box 2827
Eugene, OR 97402 USA

Production Code:

VN 12/11

1501AFGSPa; 1501AFCAFa Pacific Beveled Mirror

Parts List

Please identify the parts and check that quantities received match those on this list.
If you need to replace a part, refer to the following letter and part name.

Part	Description	Quantity
A	Mirror Assembly	1
B	Mirror	1
C	Mirror Frame (attached)	1
D	Mirror Frame Bracket (attached)	1
E	Glass Retainer 11 ft. (inserted)	1
F	Top (attached)	1
G	#8 x 1-1/4" Pan Head Screw (inserted)	4
H	#6 x 3/4" Flat Head Screw (inserted)	4
I	Mirror Wall Bracket	1
J	#8 x 1-3/4" Pan Head Screw	2
K	Mirror Support	2
L	M4 x 41 mm Machine Screw	4
M	#7 x 1-1/2" Black Pan Head Screw	4
N	Pad Strip (attached)	3

1501AFGACa; 1501AFCAFa Beveled Mirror

Assembly Instructions

Tools Required: Phillips Screwdriver, Tape Measure, Pencil

You have the option of attaching your Mirror to the wall or to selected Pacific Dressers. To attach the Mirror to a wall, follow steps 1-3. To attach the Mirror to the Dresser, follow steps 4-6.

1. Determine where you want the bottom of your mirror to end and draw a faint pencil line on the wall. Use a tape measure and measure up 25-3/8" from that line. Draw another faint line. The top line is where you attach the Mirror Wall Bracket (I). If you like, you can erase the faint bottom pencil mark. See Figure 1.

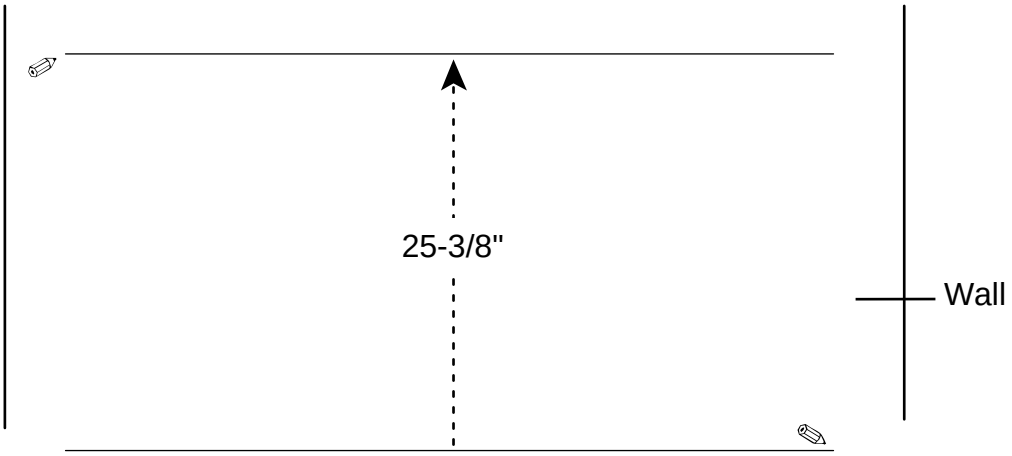

Fig. 1

2. Locate two studs in the wall behind the space where you want to hang your Beveled Mirror. Affix the Mirror Wall Bracket (I) into the studs with two #8x1-3/4" Pan Head Screws (J). If you cannot locate two studs, purchase the proper wall attachment hardware for your type of wall and secure the bracket. See Figure 2.

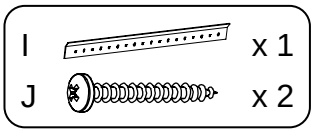

Fig. 2

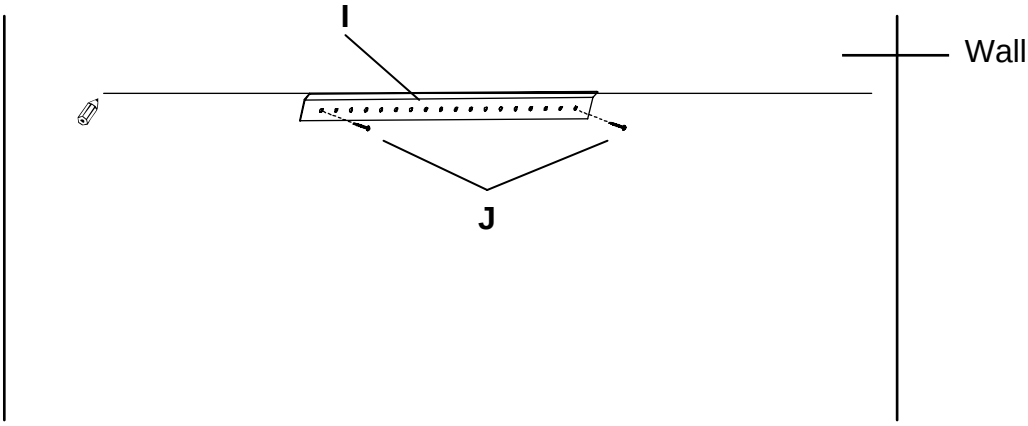

3. NOTE: The Mirror Wall Bracket (I) angles out at the top. When you hang your Beveled Mirror, the Mirror Frame Bracket (D) fits over the angled part of the Mirror Wall Bracket (I). See Figure 3.

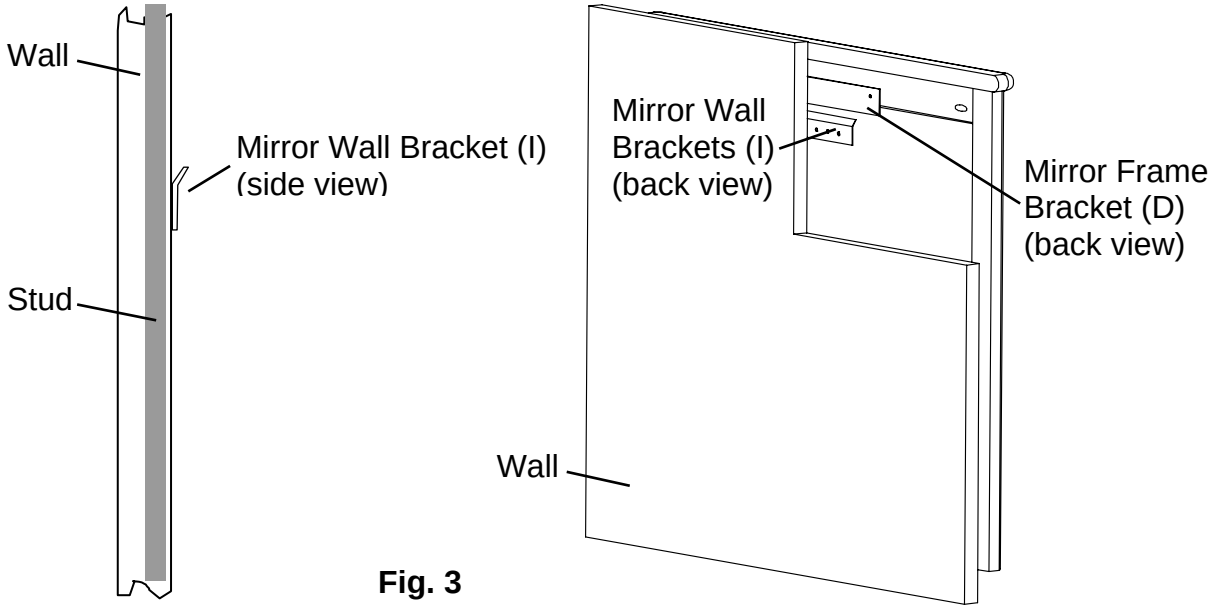

Fig. 3

4. Using the predrilled holes on the back of the Dresser as guides, attach the two Mirror Supports (K) with four M4 x 41 Machine Screws (L). Insert the upper screws into the third hole from the top and insert the lower screws into the second hole from the bottom of the Mirror Supports. See Figures 4 and 4a.

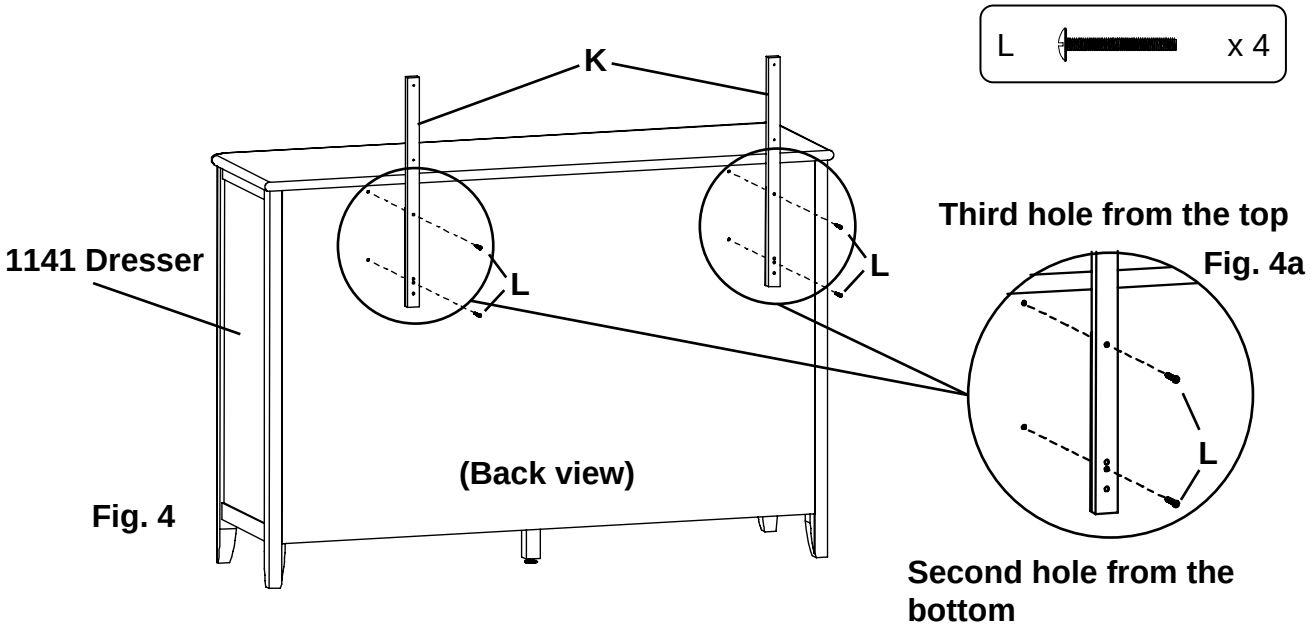

Fig. 4

5. Peel off the backings on the Pad Strips (N) and apply them to the bottom of the Mirror Assembly (A). See Figure 5.

Fig. 5

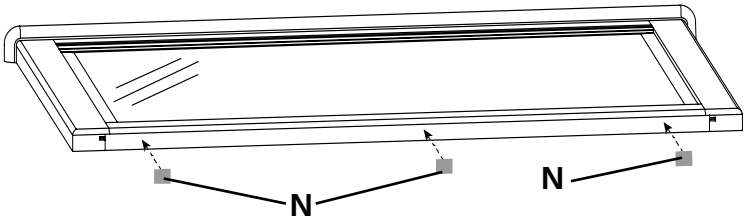

6. Place the Mirror on top of the Dresser and attach it to the Mirror Supports (K) with four #7 x 1-1/2" Black Pan Head Screws (M). See Figure 6.

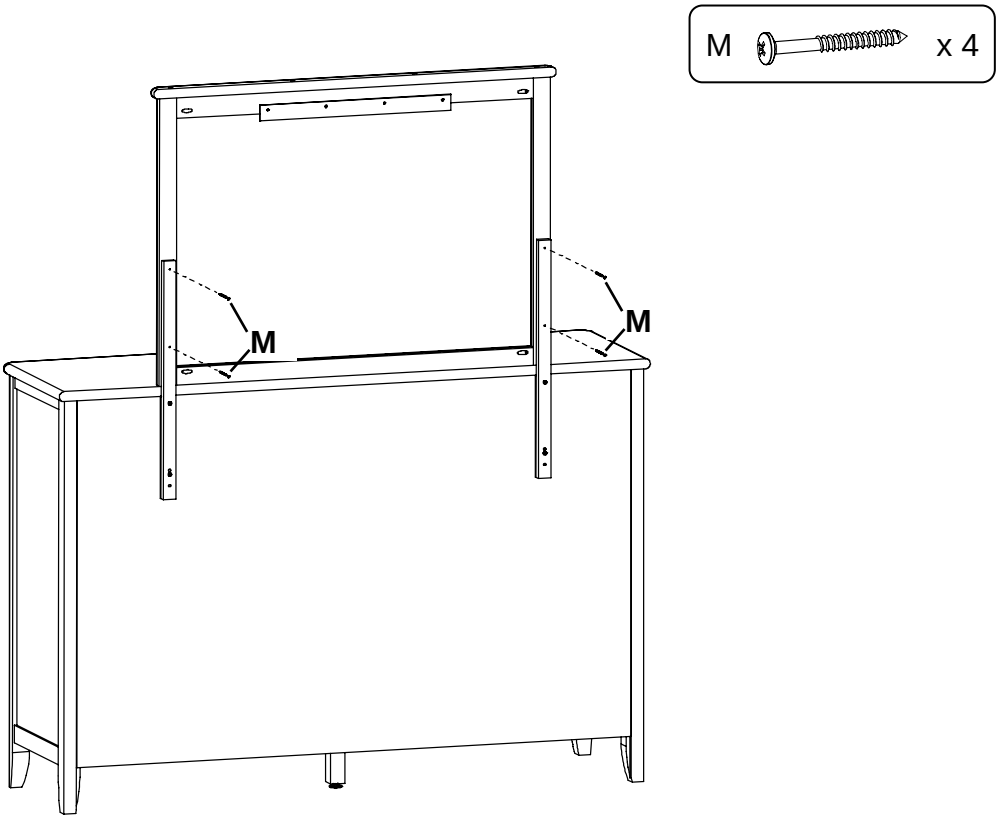

Fig. 6